2032474
Varese Pot Table

Parts and Hardware List

A.	Top Assembly	1 pc
B.	Glass Shelf	1 pc
C.	Plastic Supports	3 pcs

∗ Please make sure that you have all the parts and hardware indicated above before you begin assembly of this item.
∗ Use the hardware illustrations to determine correct piece and size.
∗ This item should be assembled on a soft surface to prevent scratching the finish during assembly.
∗ This item may require periodic tightening.

Hardware Illustrations

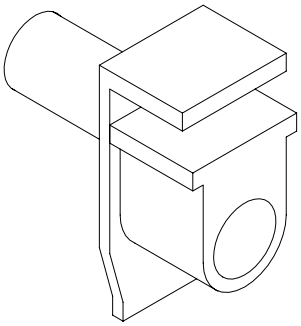

C. Plastic Support

2032474
Varese Pot Table

Install the Glass Shelf

Parts required

A.	Top Assembly	1 pc	C.	Plastic Supports	3 pcs
B.	Glass Shelf	1 pc			

1. **Install Glass Shelf (B)** Open the glass doors. Insert the Plastic Supports (C) into the desired pre-drilled holes inside the Top Assembly (A). Set the Glass Shelf (B) in the grooves of the Plastic Supports (C). See illustration.

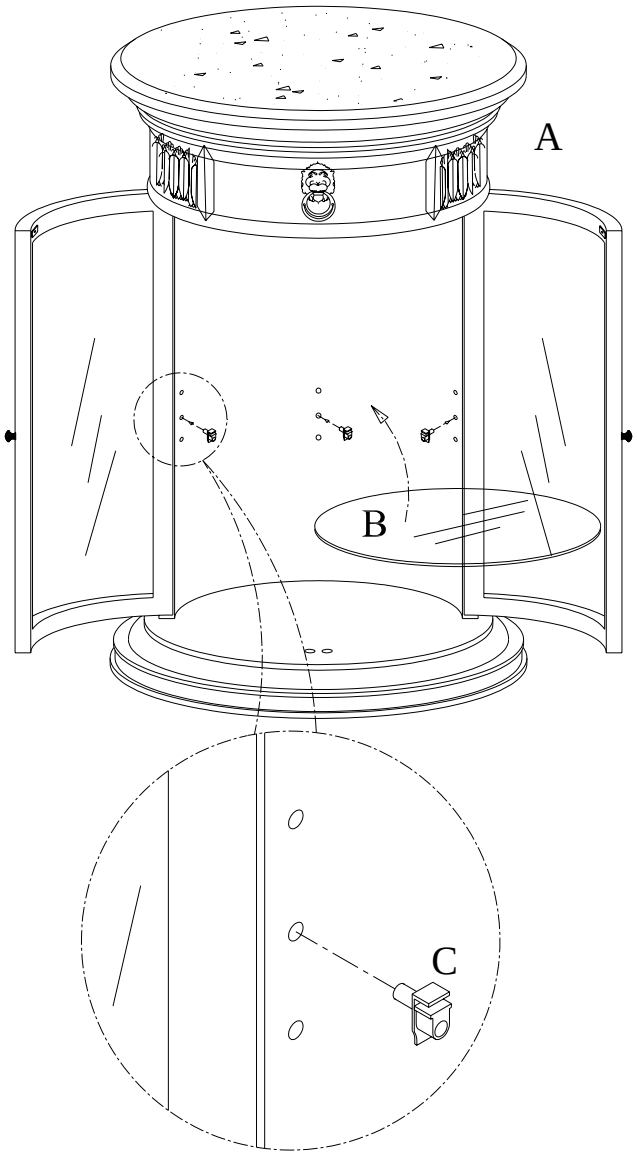

Illustration